THERMA-TRU® DOORS

Fiber-Classic® & Smooth-Star®

"SHAKER" COMPOSITE EDGE FLUSH GLAZED FIBERGLASS SINGLE DOOR

INSWING/OUTSWING "NON-IMPACT"

L F Schmidt

L. F. SCHMIDT LICENSE No. 43409 STATE OF FLORIDA PROFESSIONAL ENGINEER

Digitally signed by Lyndon F Schmidt
Date: 2026.06.17 14:56:29 -04'00'

This item has been digitally signed and sealed by **L. F. Schmidt, P.E.** on the date adjacent to the seal.

Printed copies of this document are not considered signed and sealed and the signature must be verified on any electronic copies.

THIS PRODUCT APPROVAL IS VALID ONLY FOR THE STATE OF FLORIDA

GENERAL NOTES

1. This product has been evaluated and is in compliance with the 8th Edition (2023) Florida Building Code (FBC) structural requirements excluding the "High Velocity Hurricane Zone" (HVHZ).
2. Product anchors shall be as listed and spaced as shown on details. Anchor embedment to base material shall be beyond wall dressing or stucco.
3. When used in areas requiring wind borne debris protection, this product is required to be protected with an impact resistant covering that complies with FBC Sections 1609.1.2 & R301.2.1.2.
4. For 2x stud framing construction, anchoring of these units shall be the same as that shown for 2x buck masonry construction.
5. Site conditions that deviate from the details of this drawing require further engineering analysis by a licensed engineer or registered architect.
6. Fiber-Classic & Smooth-Star Door and Sidelite panels require the use of "J" part numbers and must be stained or painted within six months of installation.

TABLE OF CONTENTS

SHEET #	DESCRIPTION
1	Typical Elevations, Design Pressures & General Notes
2	Door Panel & Glazing Details
3	Elevations
4	Horizontal & Vertical Cross Sections (2X Buck)
5	Horizontal & Vertical Cross Sections (1X Buck)
6	Horizontal & Vertical Cross Sections (Direct to Masonry)
7	Vertical Cross Sections (Thresholds)
8	Buck & Frame Anchoring
9	Hardware Details
10	Bill of Materials & Components

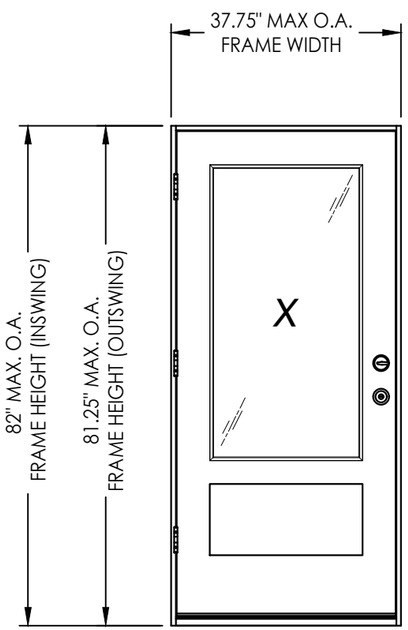

CONFIGURATION	DESIGN PRESSURE (PSF) INSWING		DESIGN PRESSURE (PSF) OUTSWING	
	POSITIVE	NEGATIVE	POSITIVE	NEGATIVE
X	+75.0	-75.0	+75.0	-75.0

Documents Prepared By:
Lyndon F. Schmidt
P.E. No. 43409

RW BUILDING CONSULTANTS, INC.
P.O. Box 230, Valrico, FL 33595
Phone No.: 813.659.9197
FBPE Registry No. 9813

PRODUCT: THERMA-TRU FIBERGLASS DOOR

PART OR ASSEMBLY: TYPICAL ELEVATION, DESIGN PRESSURES & GENERAL NOTES

NO.	DATE	REVISIONS	BY

DATE: 5/06/26
SCALE: N.T.S.
DWG. BY: LFS
CHK. BY: RW
DRAWING NO.: FL-48194.1
SHEET 1 OF 10

© 2026 RW BUILDING CONSULTANTS INC.

Z:\2023 FBC Drawings\Therma-Tru\FL-48194\FL-48194.1-2.dwg

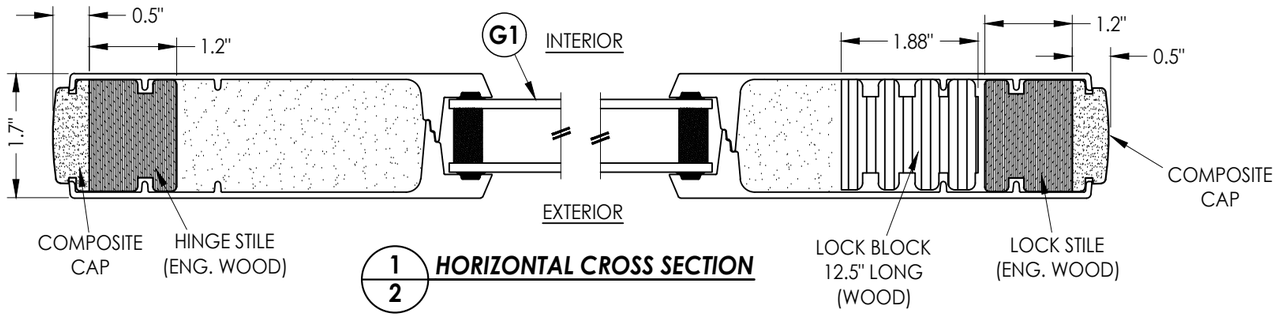

1/2 **HORIZONTAL CROSS SECTION**

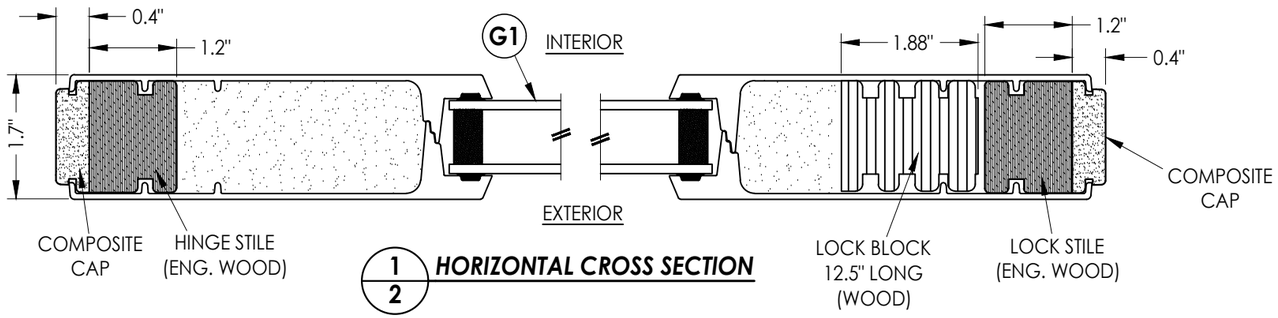

1/2 **HORIZONTAL CROSS SECTION**

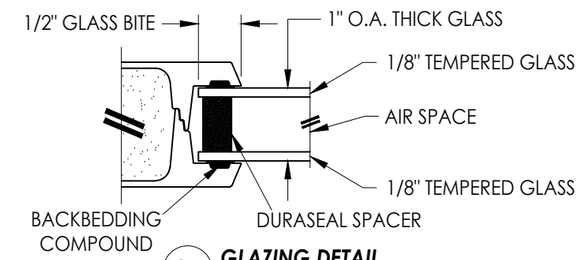

G1 **GLAZING DETAIL**
FLUSH GLAZING

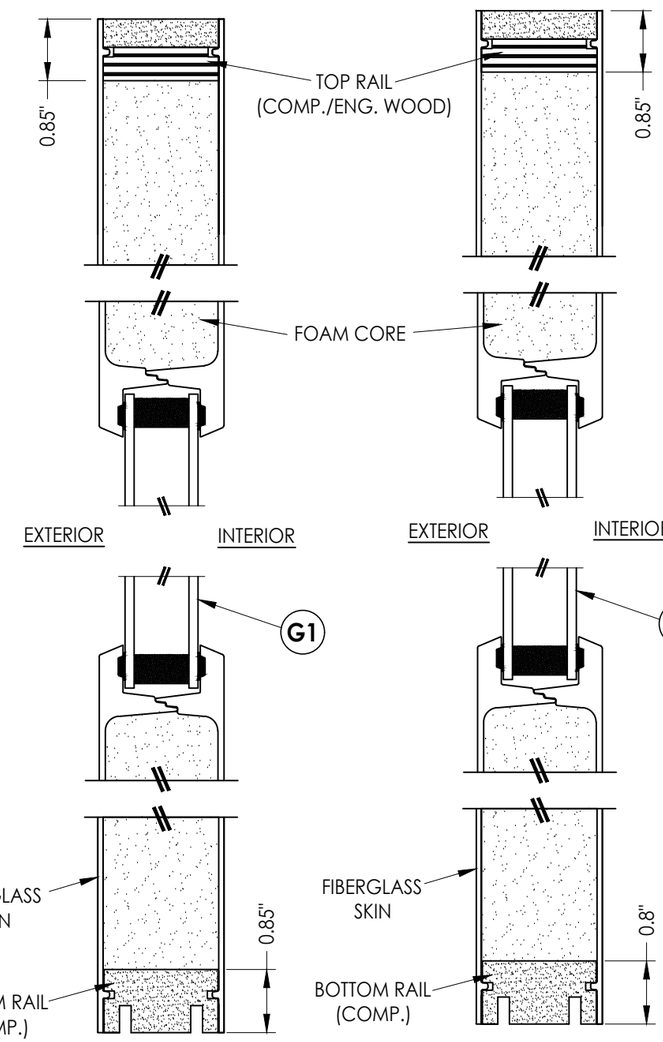

3/2 **VERTICAL CROSS SECTION**

4/2 **VERTICAL CROSS SECTION**

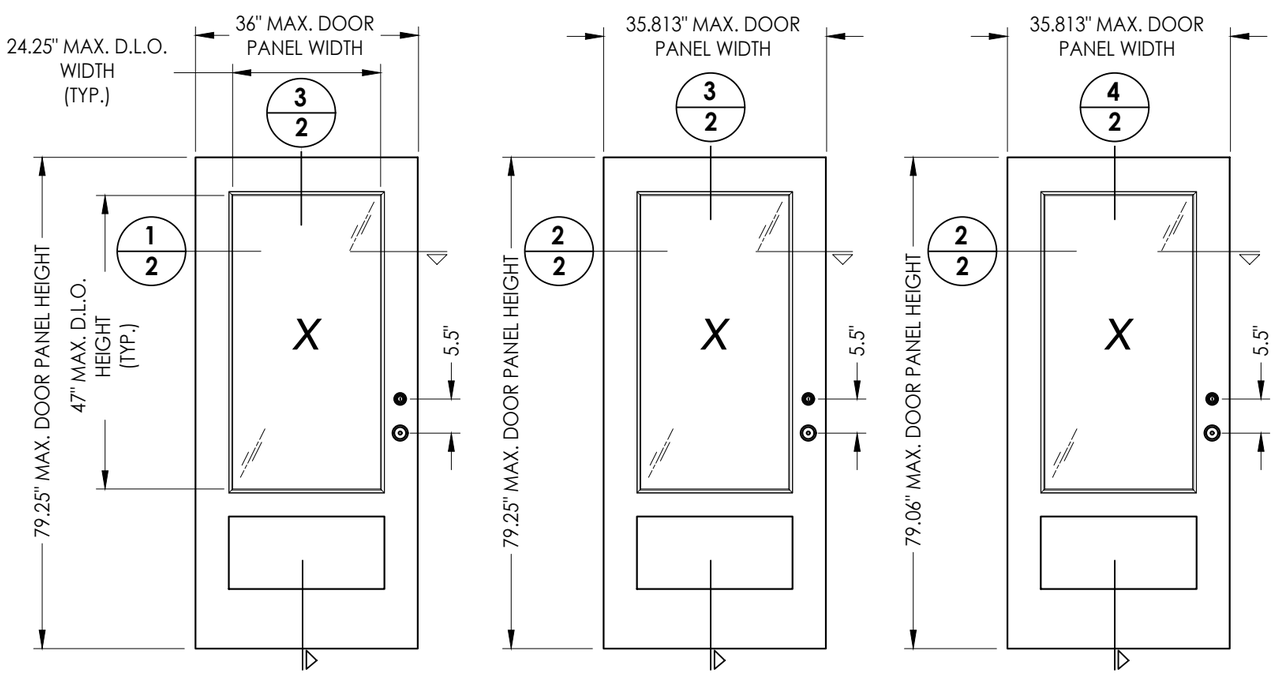

40 **FIBERGLASS DOOR PANEL**
BOOK DOOR - COMPOSITE EDGE

41 **FIBERGLASS DOOR PANEL**
HYBRID DOOR - COMPOSITE EDGE

42 **FIBERGLASS DOOR PANEL**
U1 DOOR - COMPOSITE EDGE

FIBERGLASS SKIN: 0.065" MIN. THK.
FOAM CORE: POLYURETHANE -1.9 PCF MIN.

Documents Prepared By:
Lyndon F. Schmidt
P.E. No. 43409

RW BUILDING CONSULTANTS, INC.
P.O. Box 230, Valrico, FL 33595
Phone No.: 813.659.9197
FBPE Registry No. 9813

PRODUCT: THERMA-TRU FIBERGLASS DOOR

PART OR ASSEMBLY: DOOR PANEL & GLAZING DETAILS

NO.	DATE	REVISIONS	BY

DATE: 5/06/26
SCALE: N.T.S.
DWG. BY: LFS
CHK. BY: RW
DRAWING NO.: FL-48194.1
SHEET 2 OF 10

© 2026 RW Building Consultants Inc.

Z:\2023 FBC Drawings\Therma-Tru\FL-48194\FL-48194.1-2.dwg

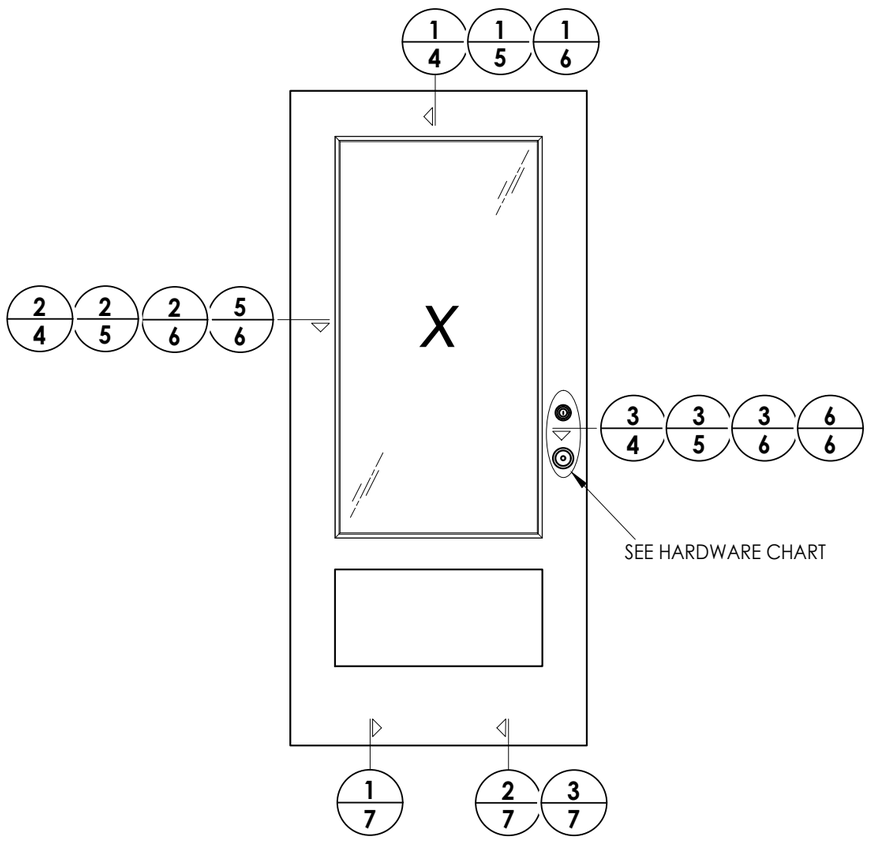

HARDWARE TABLE	
MANUFACTURER	MODEL
SCHLAGE	KNOB: F51 DEADBOLT: B60
KWIKSET	KNOB: SIGNATURE SERIES DEADBOLT: SIGNATURE SERIES (980)
HOPPE (THERMA-TRU)	MULTIPOINT : MPDGART (3 pt. Manual Tongue)

Documents Prepared By:
Lyndon F. Schmidt
P.E. No. 43409

RW BUILDING CONSULTANTS, INC.
P.O. Box 230, Valrico, FL 33595
Phone No.: 813.659.9197
FBPE Registry No. 9813

PRODUCT: THERMA-TRU FIBERGLASS DOOR

PART OR ASSEMBLY: ELEVATIONS

NO.	DATE	BY

REVISIONS

DATE: 5/06/26
SCALE: N.T.S.
DWG. BY: LFS
CHK. BY: RW
DRAWING NO.: FL-48194.1
SHEET 3 OF 10

© 2026 RW Building Consultants Inc.

Z:\2023 FBC Drawings\Therma-Tru\FL-48194\FL-48194.1-2.dwg

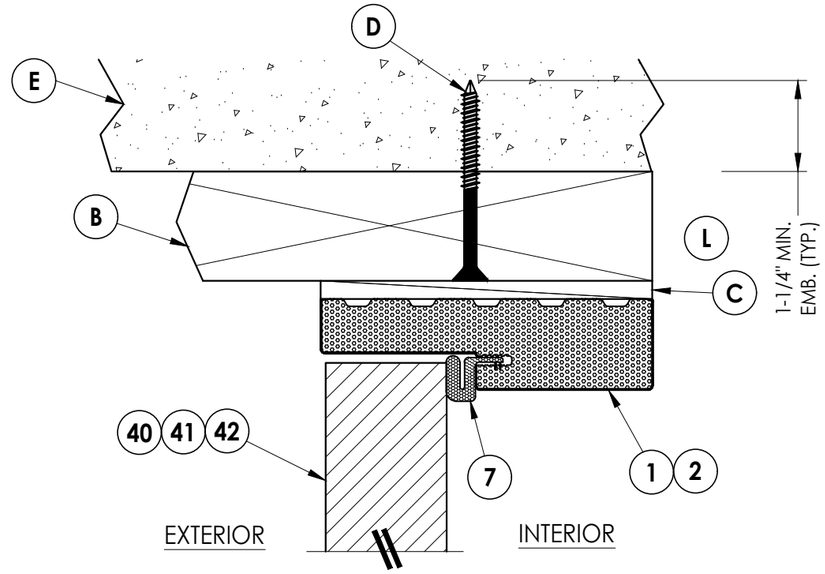

1/4 VERTICAL CROSS SECTION
Shown w/ 2X Buck
Outswing shown (Inswing similar)

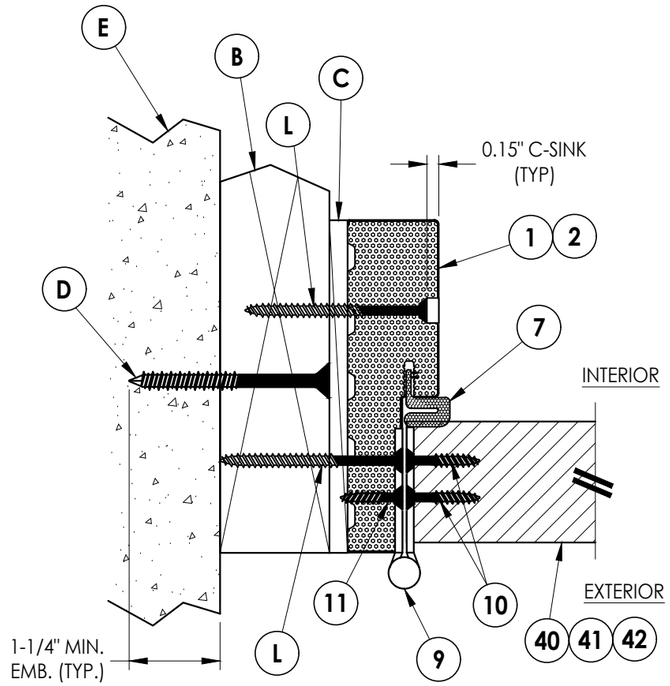

2/4 HORIZONTAL CROSS SECTION
Shown w/ 2X Buck
Outswing shown (Inswing similar)

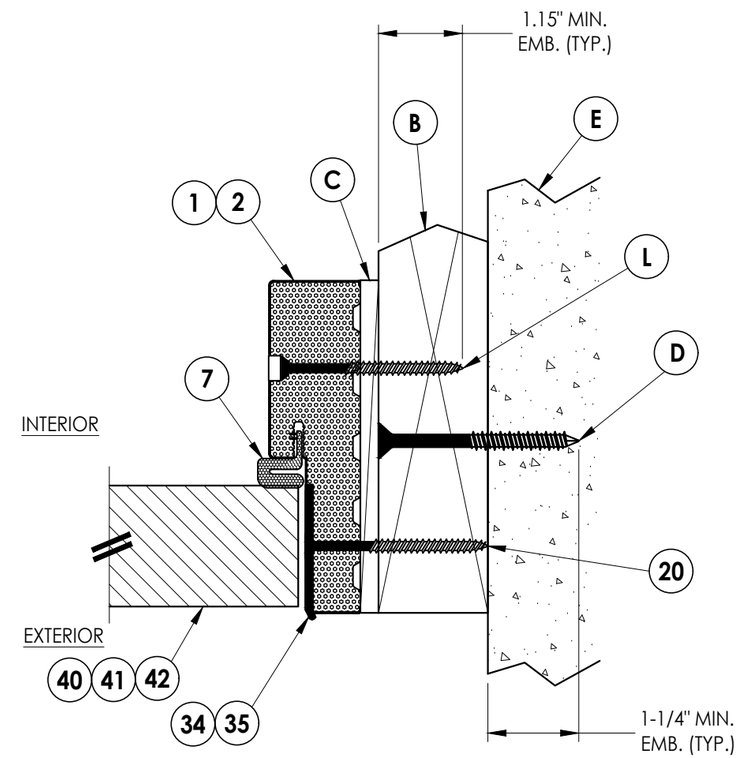

3/4 HORIZONTAL CROSS SECTION
Shown w/ 2X Buck
Outswing shown (Inswing similar)

Documents Prepared By:
Lyndon F. Schmidt
P.E. No. 43409
RW BUILDING CONSULTANTS, INC.
P.O. Box 230, Valrico, FL 33595
Phone No.: 813.659.9197
FBPE Registry No. 9813

PRODUCT: THERMA-TRU FIBERGLASS DOOR

PART OR ASSEMBLY: HORIZONTAL & VERTICAL CROSS SECTIONS (2X BUCK)

NO.	DATE	REVISIONS	BY

DATE: 5/06/26
SCALE: N.T.S.
DWG. BY: LFS
CHK. BY: RW
DRAWING NO.: FL-48194.1
SHEET 4 OF 10

© 2026 RW Building Consultants Inc.

Z:\2023 FBC Drawings\Therma-Tru\FL-48194\FL-48194.1-2.dwg

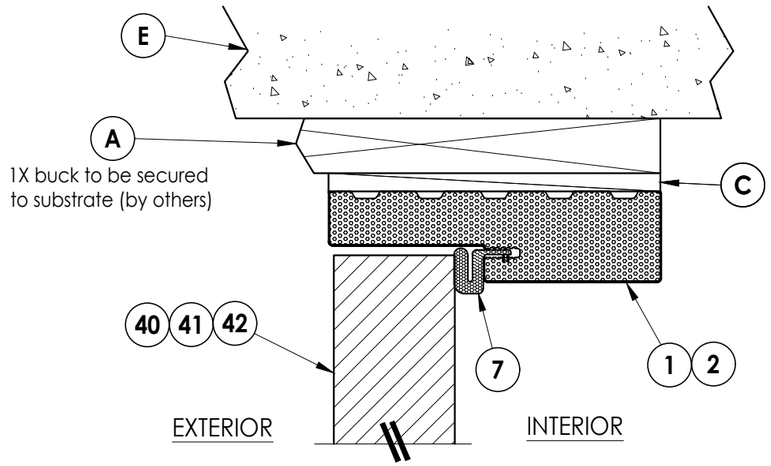

1/5 ***VERTICAL CROSS SECTION***
Shown w/ 1X sub-buck
Outswing shown (Inswing similar)

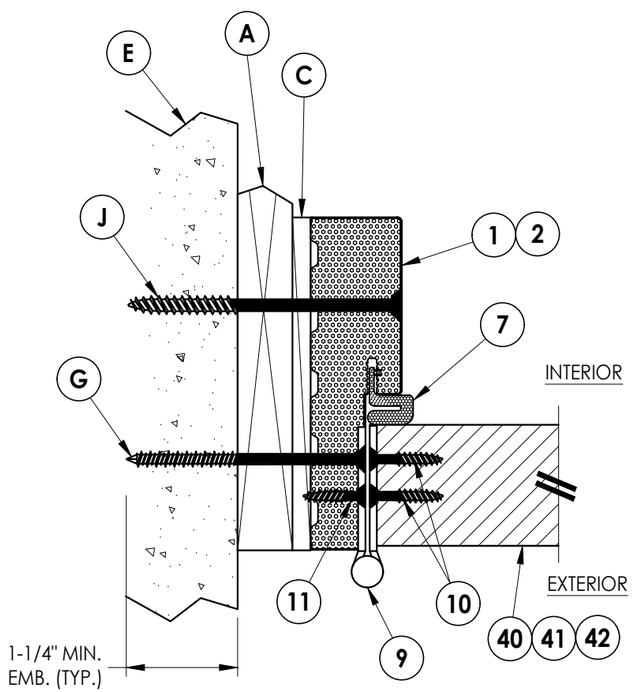

2/5 ***HORIZONTAL CROSS SECTION***
Shown w/ 1X sub-buck
Outswing shown (Inswing similar)

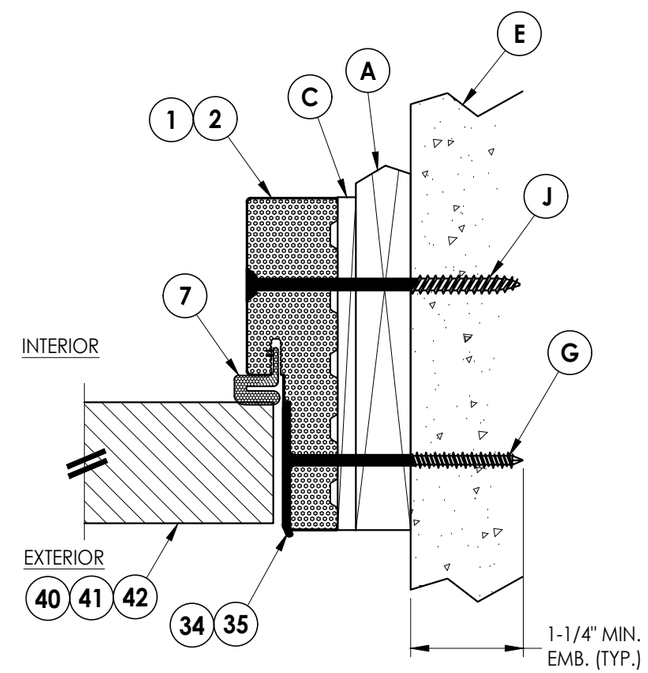

3/5 ***HORIZONTAL CROSS SECTION***
Shown w/ 1X sub-buck
Outswing shown (Inswing similar)

Documents Prepared By:
Lyndon F. Schmidt
P.E. No. 43409

RW BUILDING CONSULTANTS, INC.
P.O. Box 230, Valrico, FL 33595
Phone No.: 813.659.9197
FBPE Registry No. 9813

PRODUCT: THERMA-TRU FIBERGLASS DOOR

PART OR ASSEMBLY: HORIZONTAL & VERTICAL CROSS SECTIONS (1X BUCK)

NO.	DATE	REVISIONS	BY

DATE: 5/06/26
SCALE: N.T.S.
DWG. BY: LFS
CHK. BY: RW
DRAWING NO.: FL-48194.1
SHEET 5 OF 10

© 2026 RW Building Consultants Inc.

Z:\2023 FBC Drawings\Therma-Tru\FL-48194\FL-48194.1-2.dwg

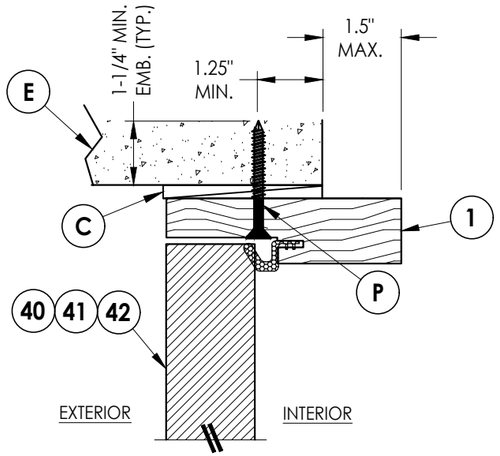

1/6 **VERTICAL CROSS SECTION**
Shown Direct to Masonry
Outswing only w/ 4-9/16" jamb

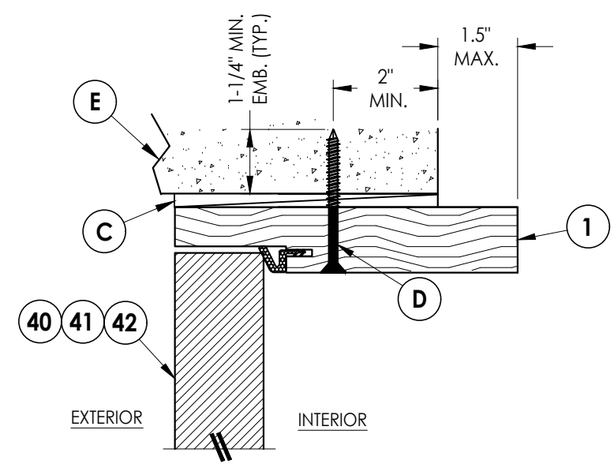

4/6 **VERTICAL CROSS SECTION**
Shown Direct to Masonry
Outswing only w/ 6-9/16" jamb

DIRECT TO MASONRY MAX. DESIGN PRESSURE:
± 55 PSF

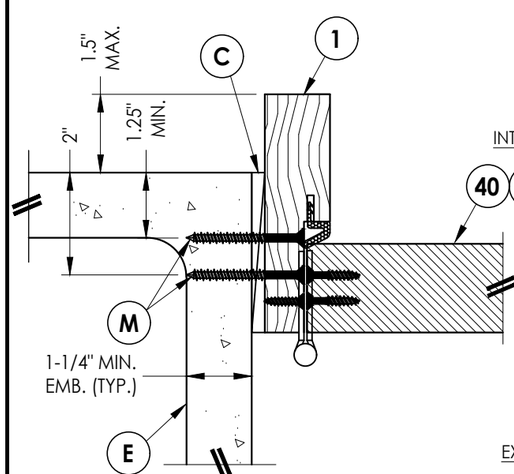

2/6 **HORIZONTAL CROSS SECTION**
Shown Direct to Masonry
Outswing only w/ 4-9/16" jamb

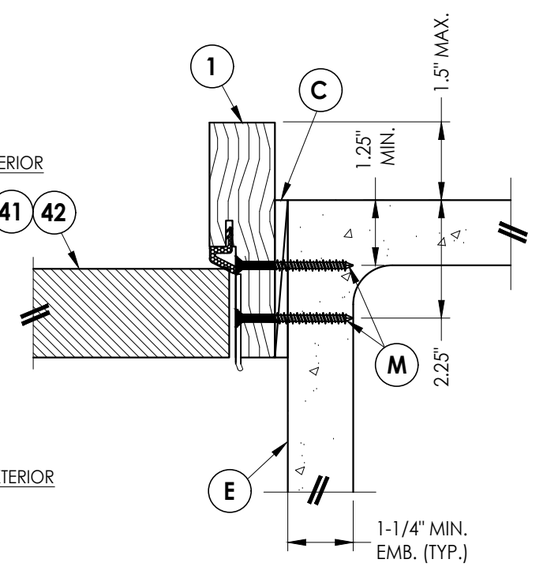

3/6 **HORIZONTAL CROSS SECTION**
Shown Direct to Masonry
Outswing only w/ 4-9/16" jamb

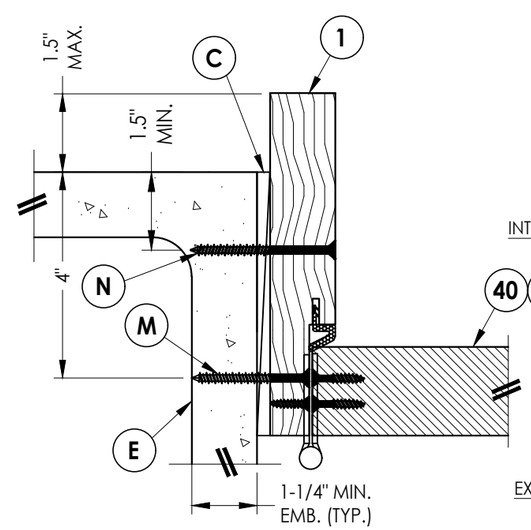

5/6 **HORIZONTAL CROSS SECTION**
Shown Direct to Masonry
Outswing only w/ 6-9/16" jamb

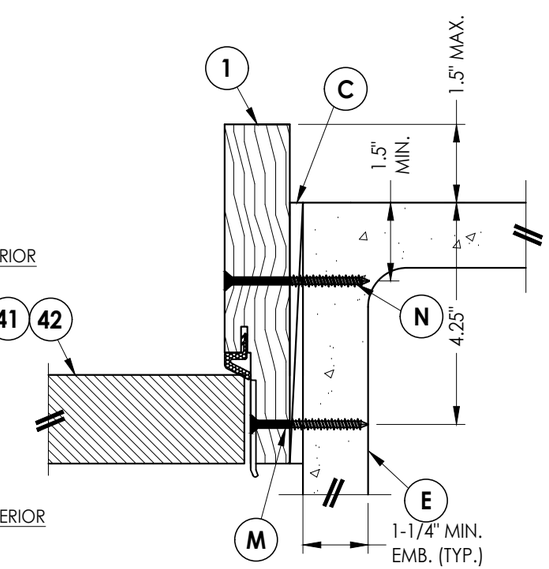

6/6 **HORIZONTAL CROSS SECTION**
Shown Direct to Masonry
Outswing only w/ 6-9/16" jamb

Documents Prepared By:
Lyndon F. Schmidt
P.E. No. 43409
RW BUILDING CONSULTANTS, INC.
P.O. Box 230, Valrico, FL 33595
Phone No.: 813.659.9197
FBPE Registry No. 9813

PRODUCT: *THERMA-TRU FIBERGLASS DOOR*

PART OR ASSEMBLY: *HORIZONTAL & VERTICAL SECTIONS (DIRECT TO MASONRY)*

REVISIONS

NO.	DATE	BY

DATE: 5/06/26
SCALE: N.T.S.
DWG. BY: LFS
CHK. BY: RW
DRAWING NO.: FL-48194.1
SHEET 6 OF 10

© 2026 RW Building Consultants Inc.

Z:\2023 FBC Drawings\Therma-Tru\FL-48194\FL-48194.1-2.dwg

Notes:
1. Sill items #14 & 15 are attached to each jamb w/ (3) #8 X 2-1/2" FH Deep Thread Wood Screws.
2. Sill item #16 is attached to each jamb w/ (4) #10 X 2" PH SMS at each end (2 screws through jamb into sill & 2 screws through sill up into jamb).

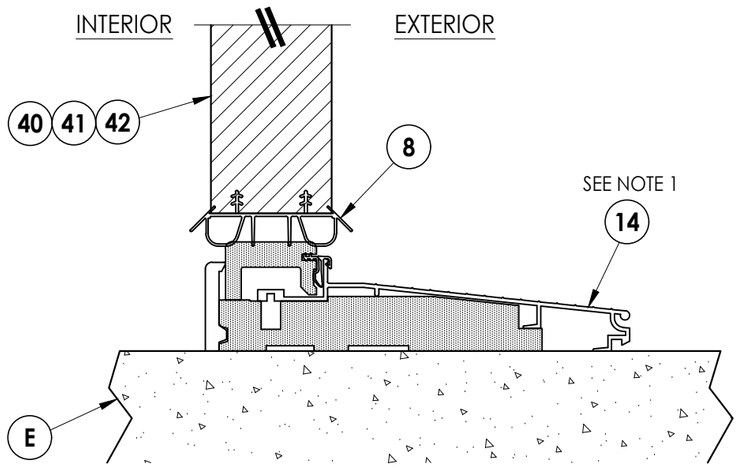

1/7 **VERTICAL CROSS SECTION**
Inswing Sill

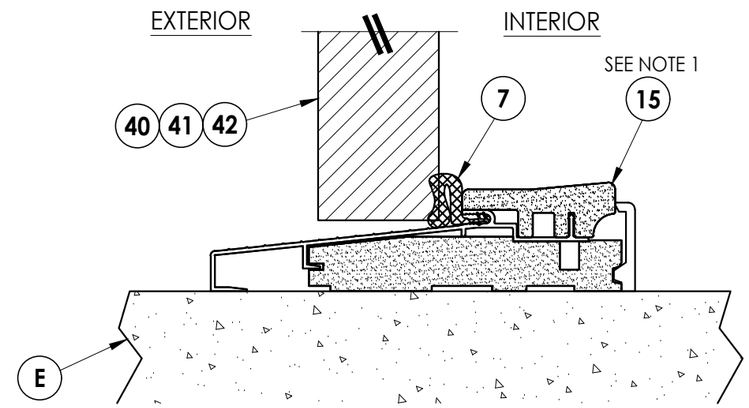

2/7 **VERTICAL CROSS SECTION**
Outswing Sill

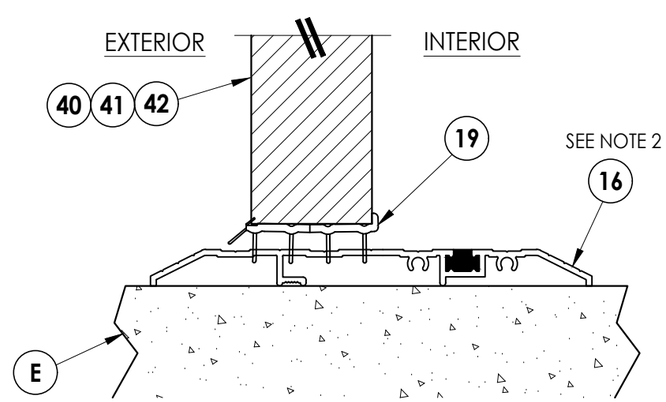

3/7 **VERTICAL CROSS SECTION**
Public Access Sill

Documents Prepared By:
Lyndon F. Schmidt
P.E. No. 43409

RW BUILDING CONSULTANTS, INC.
P.O. Box 230, Valrico, FL 33595
Phone No.: 813.659.9197
FBPE Registry No. 9813

PRODUCT: THERMA-TRU FIBERGLASS DOOR

PART OR ASSEMBLY: VERTICAL CROSS SECTIONS (THRESHOLDS)

NO.	DATE	REVISIONS	BY

DATE: 5/06/26
SCALE: N.T.S.
DWG. BY: LFS
CHK. BY: RW
DRAWING NO.: FL-48194.1
SHEET 7 OF 10

© 2026 RW Building Consultants Inc.

Z:\2023 FBC Drawings\Therma-Tru\FL-48194\FL-48194.1-2.dwg

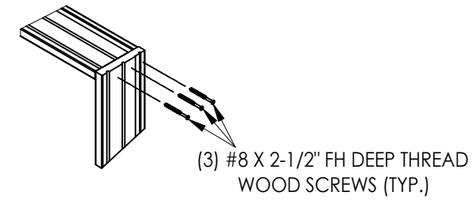

JAMB TO HEAD DETAIL
(TYP.)

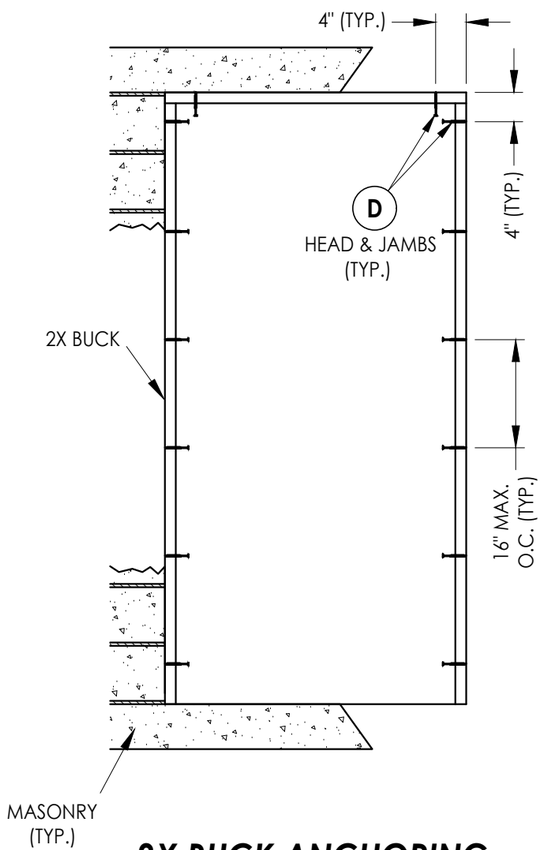

2X BUCK ANCHORING

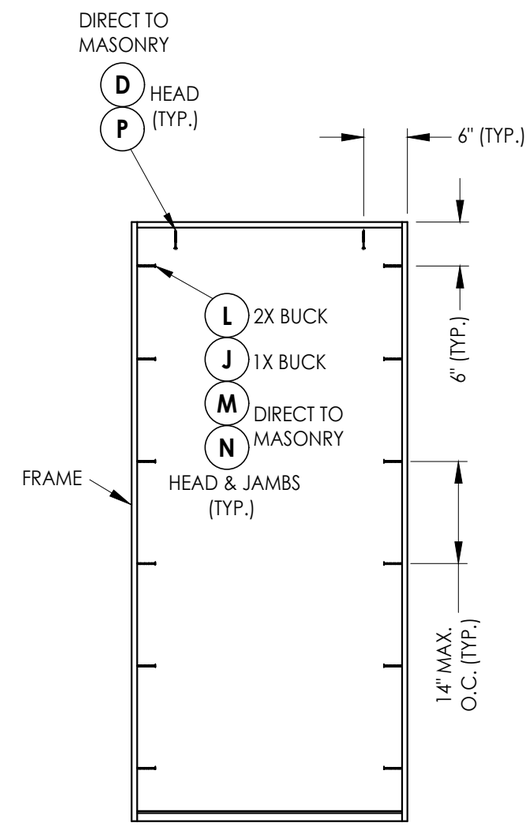

FRAME ANCHORING

Documents Prepared By:
Lyndon F. Schmidt
P.E. No. 43409

RW BUILDING CONSULTANTS, INC.
P.O. Box 230, Valrico, FL 33595
Phone No.: 813.659.9197
FBPE Registry No. 9813

PRODUCT: THERMA-TRU FIBERGLASS DOOR

PART OR ASSEMBLY: BUCK & FRAME ANCHORING

NO.	DATE	REVISIONS	BY

DATE: 5/06/26
SCALE: N.T.S.
DWG. BY: LFS
CHK. BY: RW
DRAWING NO.: FL-48194.1
SHEET 8 OF 10

© 2026 RW Building Consultants Inc.

Z:\2023 FBC Drawings\Therma-Tru\FL-48194\FL-48194.1-2.dwg

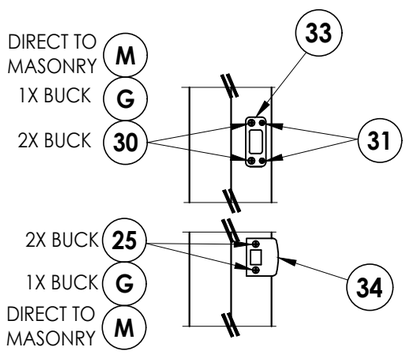

LATCH & DEADBOLT DETAIL
Kwikset

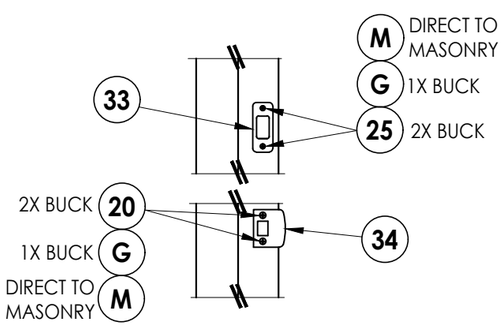

LATCH & DEADBOLT DETAIL
Schlage

LATCH & DEADBOLT STRIKE DETAILS

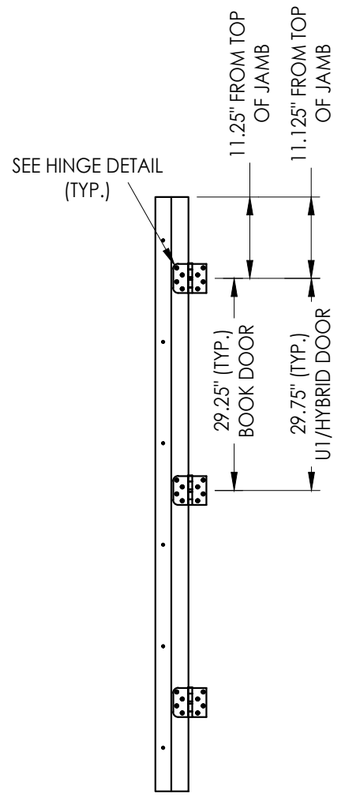

HINGE JAMB

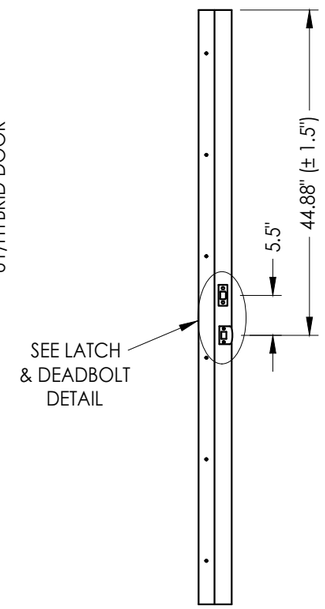

STRIKE JAMB
Latch & Deadbolt

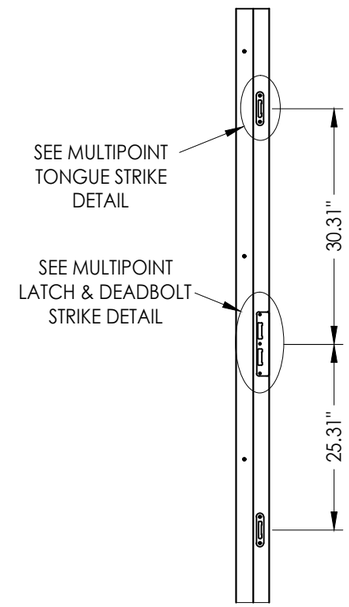

STRIKE JAMB
Multipoint Lock

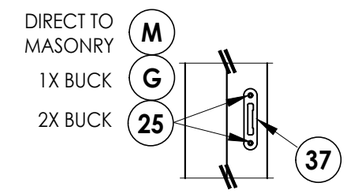

MULTIPOINT TONGUE STRIKE PLATE DETAIL

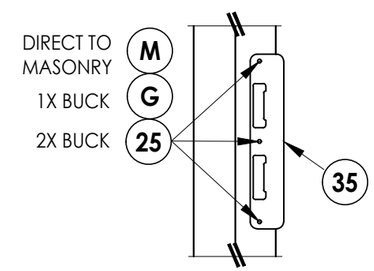

MULTIPOINT LATCH & BOLT STRIKE PLATE DETAIL

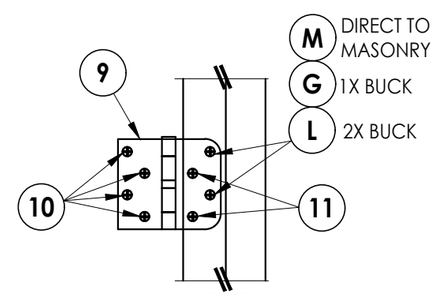

HINGE DETAIL
Inswing

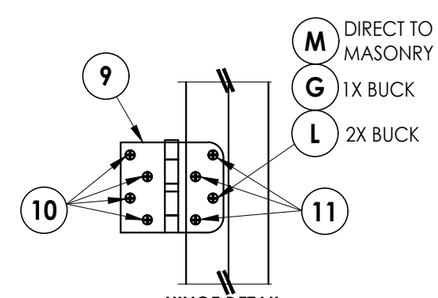

HINGE DETAIL
Outswing

Documents Prepared By:
Lyndon F. Schmidt
P.E. No. 43409

RW BUILDING CONSULTANTS, INC.
P.O. Box 230, Valrico, FL 33595
Phone No.: 813.659.9197
FBPE Registry No. 9813

PRODUCT: THERMA-TRU FIBERGLASS DOOR

PART OR ASSEMBLY: HARDWARE DETAILS

NO.	DATE	REVISIONS	BY

DATE: 5/06/26
SCALE: N.T.S.
DWG. BY: LFS
CHK. BY: RW
DRAWING NO.: FL-48194.1
SHEET 9 OF 10

© 2026 RW Building Consultants Inc.

Z:\2023 FBC Drawings\Therma-Tru\FL-48194\FL-48194.1-2.dwg

BILL OF MATERIALS

ITEM #	DESCRIPTION	MATERIAL
A	1X BUCK (G >= 0.42)	WOOD
B	2X BUCK (G >= 0.42)	WOOD
C	1/4" MAX. SHIM SPACE	-
D	1/4" X 2-3/4" PFH DeWALT OR ITW CONCRETE SCREW	STEEL
E	MASONRY - 3,000 PSI MIN. CONCRETE CONFORMING TO ACI 301 OR HOLLOW BLOCK CONFORMING TO ASTM C90	CONCRETE
F	#10 X 2" PFH WOOD SCREW	STEEL
G	3/16" X 3-1/4" PFH ITW CONCRETE SCREW	STEEL
J	1/4" X 3-3/4" PFH DeWALT OR ITW CONCRETE SCREW	STEEL
L	#10 X 2-1/2" PFH WOOD SCREW (1.15" MIN. EMBEDMENT)	STEEL
M	3/16" X 2-1/4" ITW CONCRETE SCREW	STEEL
N	3/16" X 2-3/4" ITW CONCRETE SCREW	STEEL
P	1/4" X 2-3/4" PFH ELCO CONCRETE SCREW	STEEL
1	COMPOSITE JAMB	COMP
2	WOOD JAMB (FINGER JOINT PINE)	WOOD
7	WEATHERSTRIP	FOAM
8	DOOR SWEEP	VINYL
9	4" X 4" HINGE	STEEL
10	#10 X 1" PFH WOOD SCREW	STEEL
11	#10 X 3/4" PFH WOOD SCREW	STEEL
14	INSWING THRESHOLD	ALUM/COMP
15	OUTSWING THRESHOLD	ALUM/COMP
16	PUBLIC ACCESS THRESHOLD	ALUM
17	INSWING SIDELITE ADAPTER	VINYL
18	OUTSWING SIDELITE ADAPTER	VINYL
19	SWEEP (USE w/ PUBLIC ACCESS THRESHOLD)	VINYL
25	#8 X 2-1/2" PFH WOOD SCREW	STEEL
26	#8 X 2-1/2" PFH DEEP THREAD WOOD SCREW	STEEL
30	#12 X 2-1/2" PFH WOOD SCREW	STEEL
31	#8 X 3/4" PFH WOOD SCREW	STEEL
33	DEADBOLT STRIKE PLATE	STEEL
34	LATCH STRIKE PLATE	STEEL
35	MULTIPOINT LATCH STRIKE PLATE	STEEL
37	MULTIPOINT TONGUE STRIKE PLATE	STEEL
40	DOOR PANEL (BOOK)	-
41	DOOR PANEL (HYBRID)	-
42	DOOR PANEL (U1)	-
50	SIDELITE PANEL	-

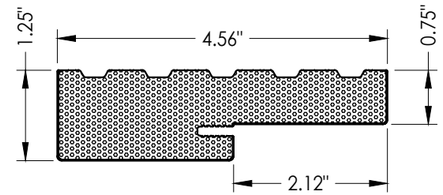

1 COMPOSITE JAMB

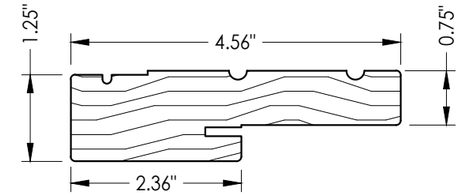

2 WOOD JAMB

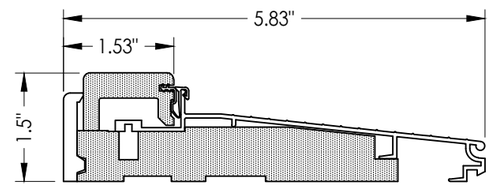

14 INSWING THRESHOLD

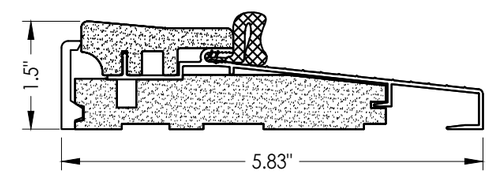

15 OUTSWING THRESHOLD
Composite / Aluminum Sill

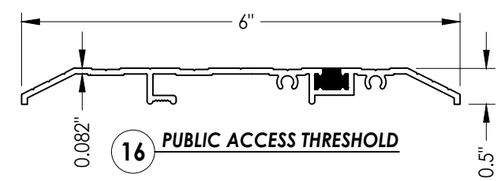

16 PUBLIC ACCESS THRESHOLD

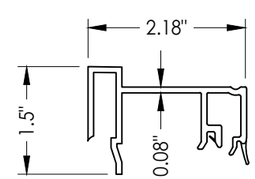

17 INSWING SIDELITE ADAPTER

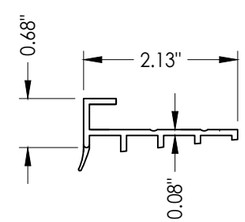

18 OUTSWING SIDELITE ADAPTER

CONCRETE ANCHOR NOTES:

1. *Concrete anchor locations at the corners may be adjusted to maintain the min. edge distance to mortar joints.*
2. *Concrete anchor locations noted as "MAX. ON CENTER" must be adjusted to maintain the min. edge distance to mortar joints, additional concrete anchors may be required to ensure the "MAX. ON CENTER" dimension are not exceeded.*
3. *Concrete anchor table:*

ANCHOR TYPE	ANCHOR SIZE	MIN. EMBEDMENT	MIN. CLEARANCE TO MASONRY EDGE	MIN. CLEARANCE TO ADJACENT ANCHOR
ITW TAPCON®	1/4"	1-1/4"	2"	4"
DeWALT ULTRACON+®	1/4"	1-1/4"	1"	4"
ITW TAPCON®	3/16"	1-1/4"	AS SHOWN	AS SHOWN

WOOD SCREW INSTALLATION NOTES:

1. *Maintain a minimum 5/8" edge distance, 1" end distance, & 1" o.c. spacing of wood screws to prevent the splitting of wood.*

Documents Prepared By:
RW BUILDING CONSULTANTS, INC.
P.O. Box 230 Valrico FL. 33595
Phone No.: 813.659.9197
Florida Board of Professional Engineers
Certificate Of Authorization No. 9813

PRODUCT: THERMA-TRU FIBERGLASS DOOR

PART OR ASSEMBLY: BILL OF MATERIALS & COMPONENTS

NO.	DATE	REVISIONS	BY

DATE: 5/06/26
SCALE: N.T.S.
DWG. BY: LFS
CHK. BY: RW
DRAWING NO.: FL-48194.1
SHEET 10 OF 10

© 2026 RW Building Consultants Inc.

Z:\2023 FBC Drawings\Therma-Tru\FL-48194\FL-48194.1-2.dwg